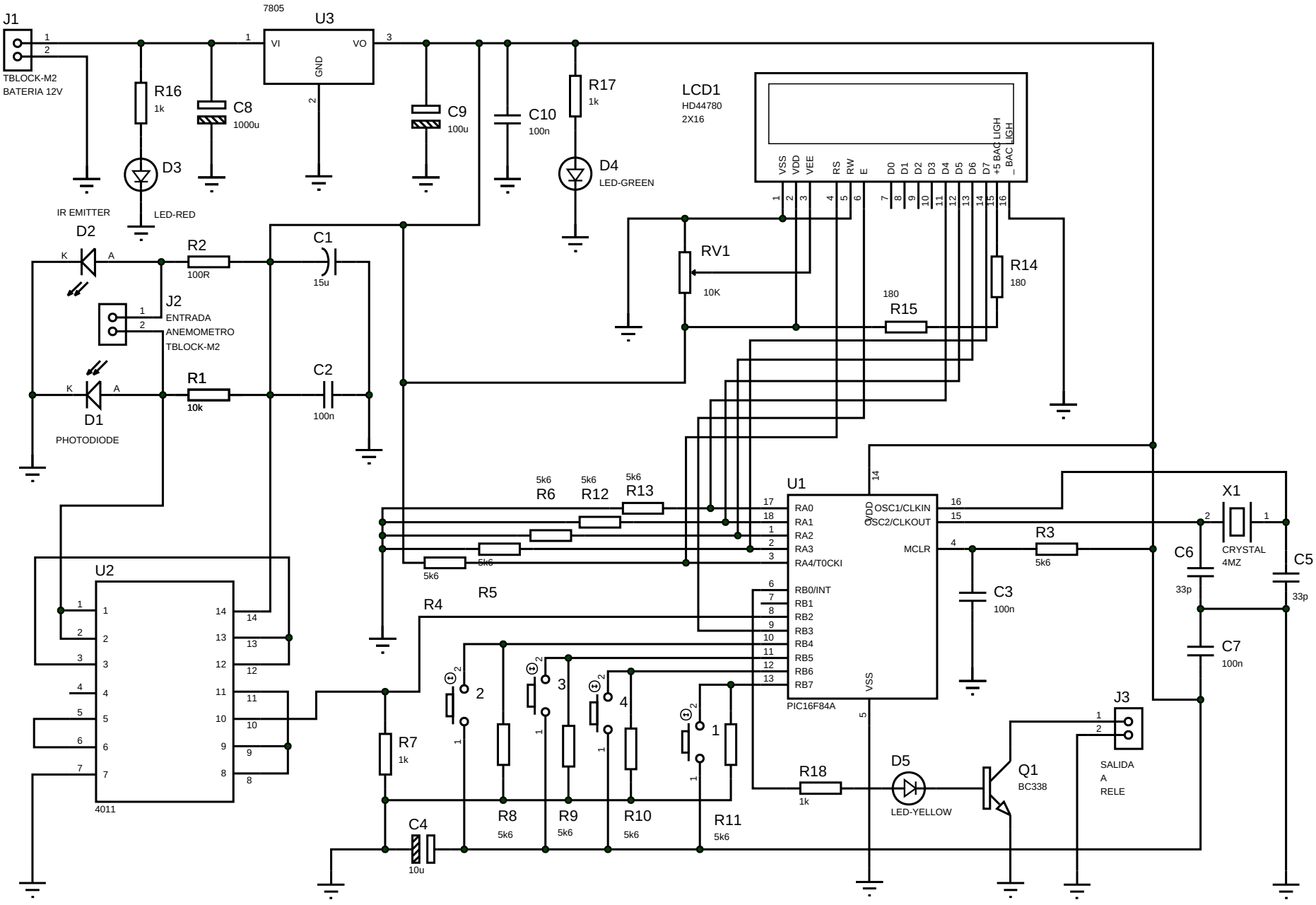
J1
TBLOCK-M2
BATERIA 12V
7805
U3
VI
VO
GND
R16
1k
C8
1000u
D3
LED-RED
C9
100u
C10
100n
R17
1k
D4
LED-GREEN
LCD1
HD44780
2X16
VSS
VDD
VEE
RS
RW
E
D0
D1
D2
D3
D4
D5
D6
D7
+5 BAC LIGH
_ BAC LIGH
RV1
10K
R14
180
R15
180
IR EMITTER
D2
R2
100R
C1
15u
J2
ENTRADA
ANEMOMETRO
TBLOCK-M2
R1
10k
C2
100n
D1
PHOTODIODE
U1
PIC16F84A
RA0
RA1
RA2
RA3
RA4/T0CKI
RB0/INT
RB1
RB2
RB3
RB4
RB5
RB6
RB7
OSC1/CLKIN
OSC2/CLKOUT
MCLR
VDD
VSS
R6
5k6
R12
5k6
R13
5k6
R5
5k6
R3
5k6
C3
100n
X1
CRYSTAL
4MZ
C6
33p
C5
33p
C7
100n
U2
4011
R4
R7
1k
R8
5k6
R9
5k6
R10
5k6
R11
5k6
C4
10u
R18
1k
D5
LED-YELLOW
Q1
BC338
J3
SALIDA
A
RELE